Pole Banner Installation Instruction

1.

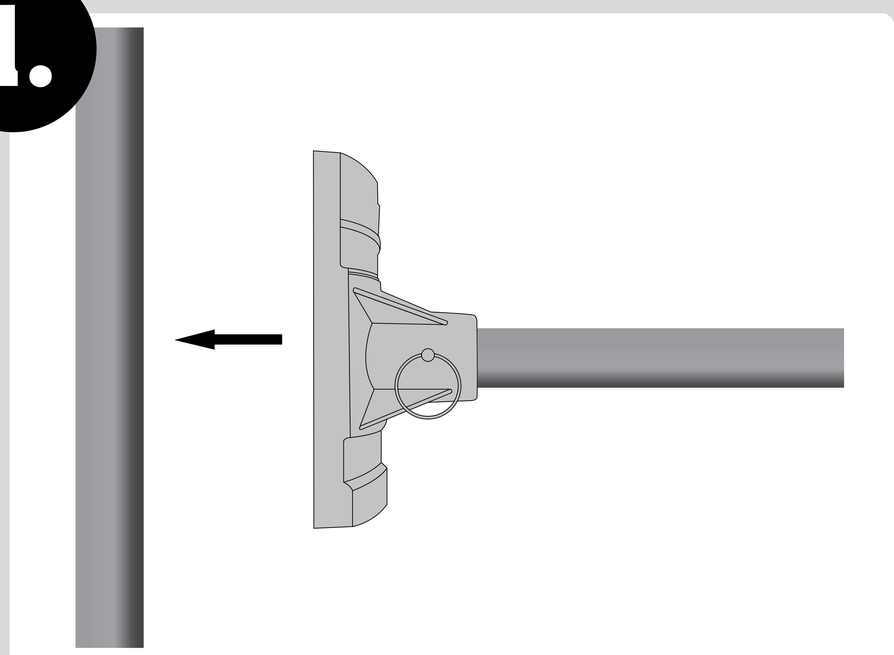

Place mounting brackets firmly against your pole and secure by attaching them using the included steel bands.
You can leave the bottom one lose enough to allow for adjustment at the end of the installation.

2.

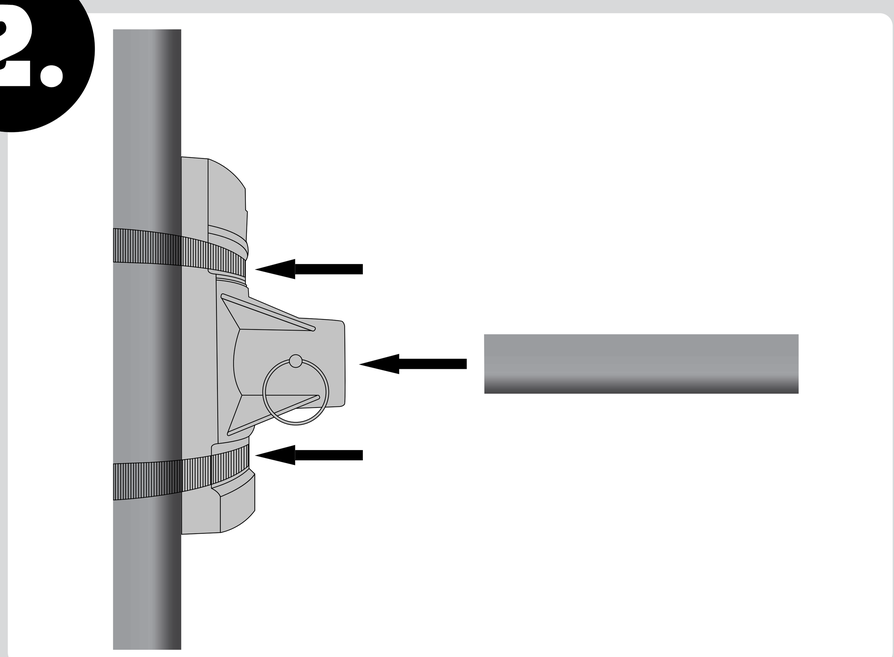

Install the flag poles into the mounting brackets and lock in place using the supplied steel pins.

3.

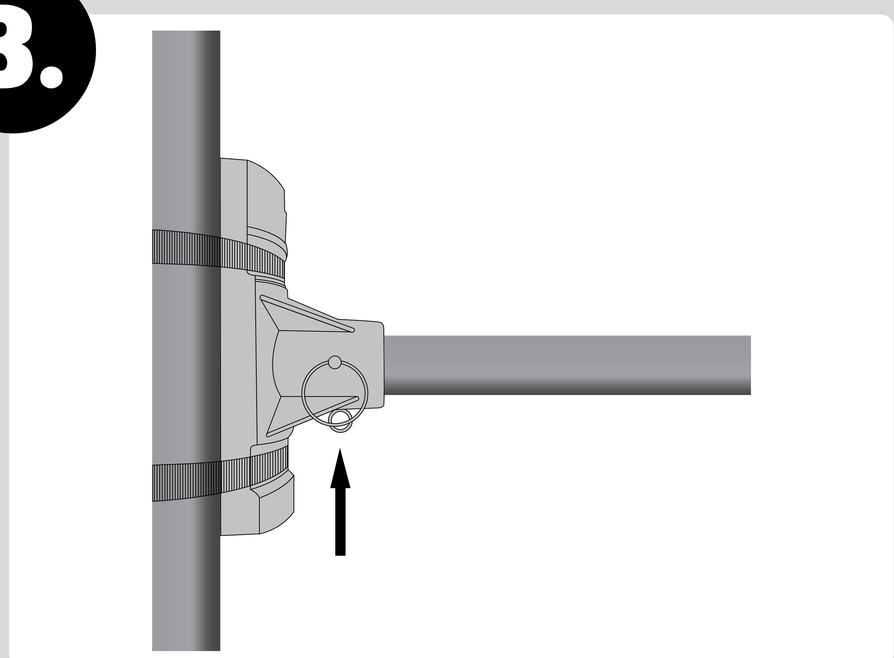

Install the threaded eyelet piece into the bottom of the mounting bracket.

4.

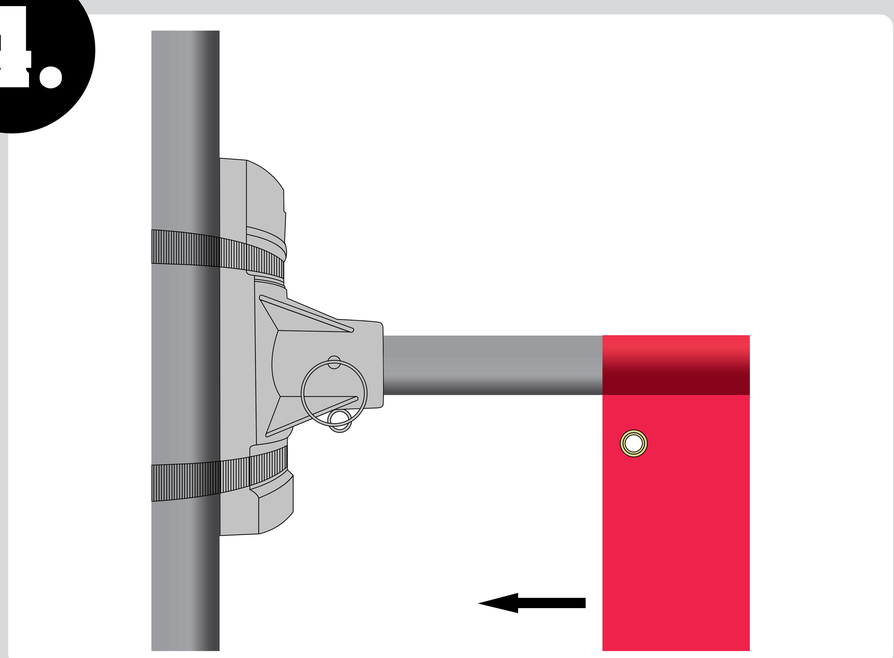

Install the banners by sliding the banner pole pockets over the flag poles.

5.

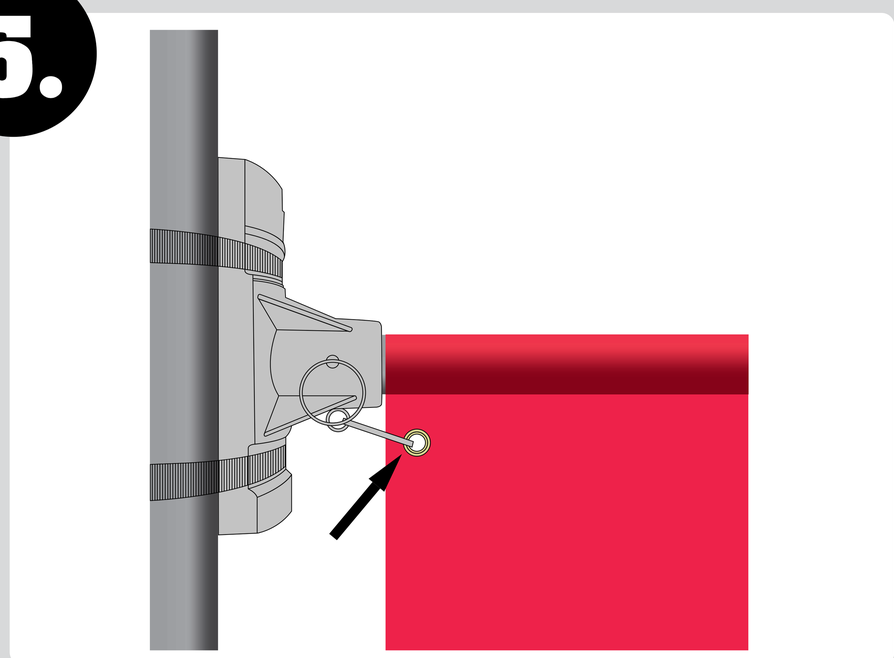

Secure the banner by tying the grommet hole to the eyelet hardware that was installed on step 4.

6.

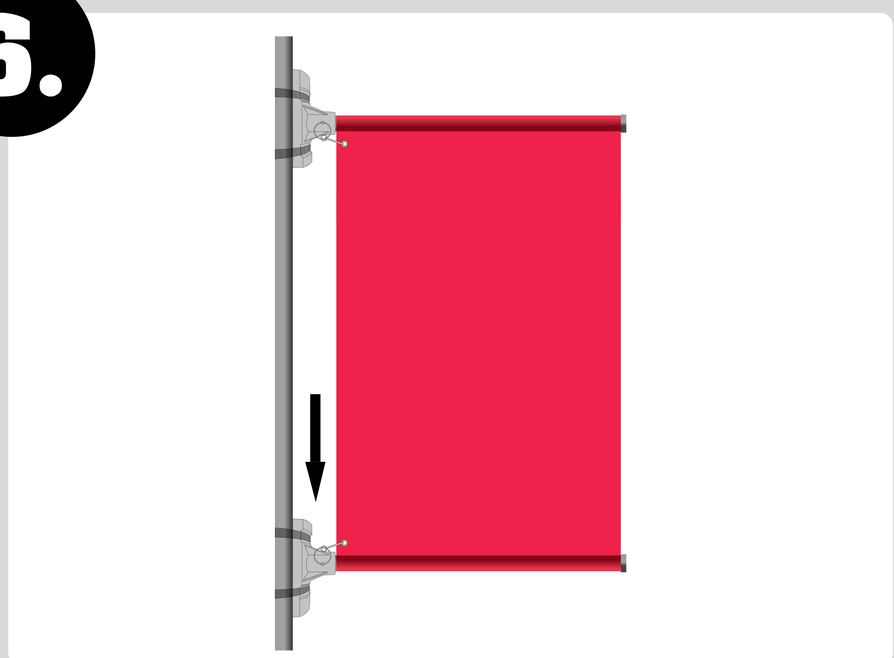

Adjust the lower mounting bracket to set the desired tension and tighten down the straps.