# LookOurWay

# 4 PANEL PYRAMID

## TABLE TOP POP UP DISPLAYS

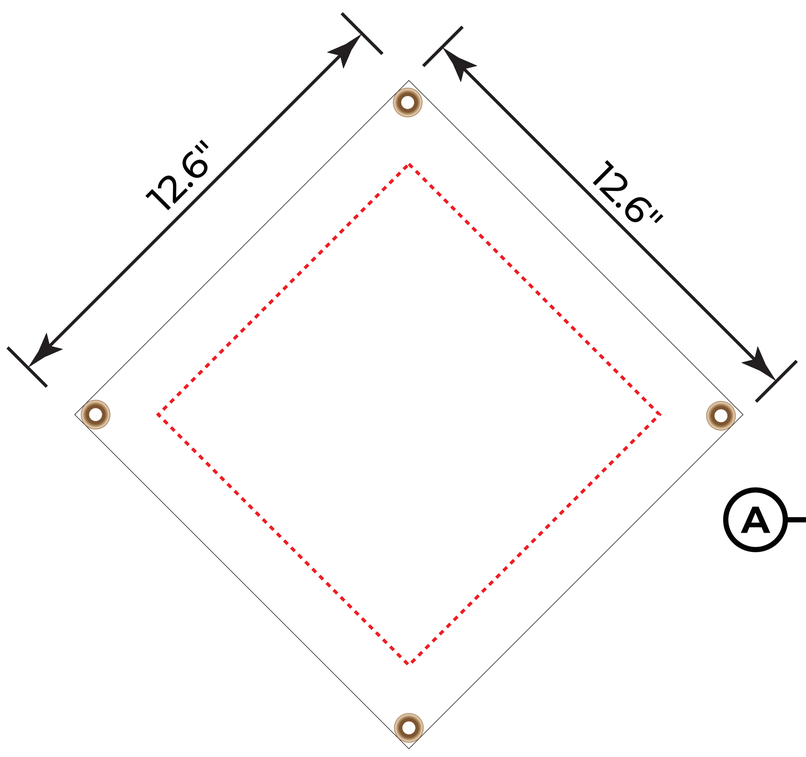


(A)

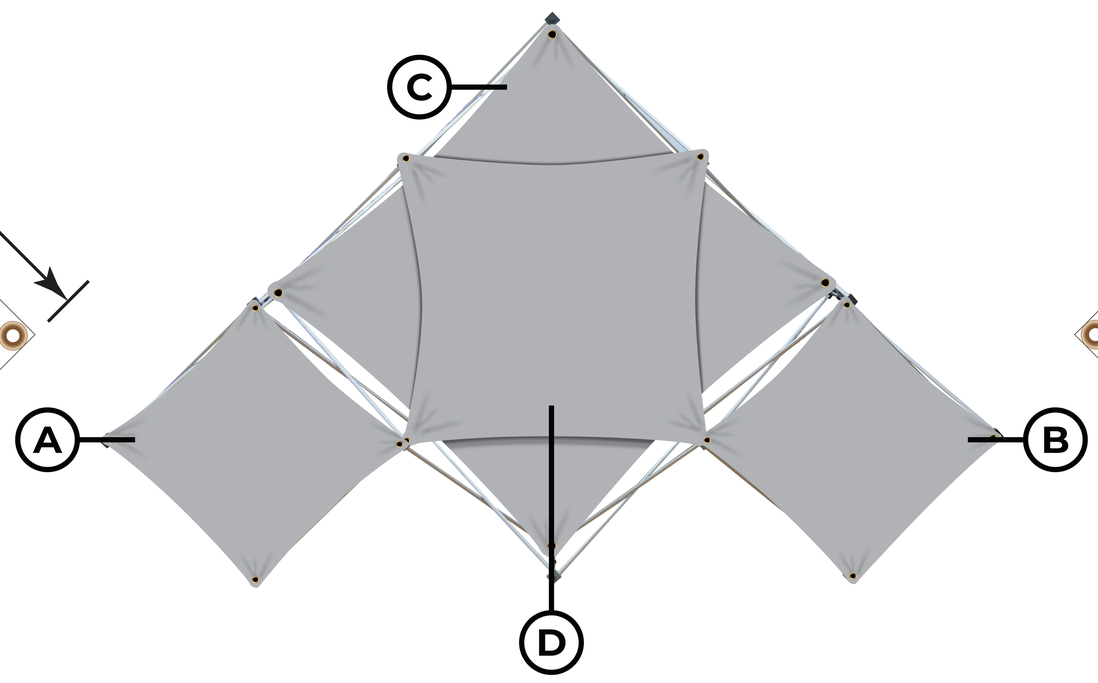


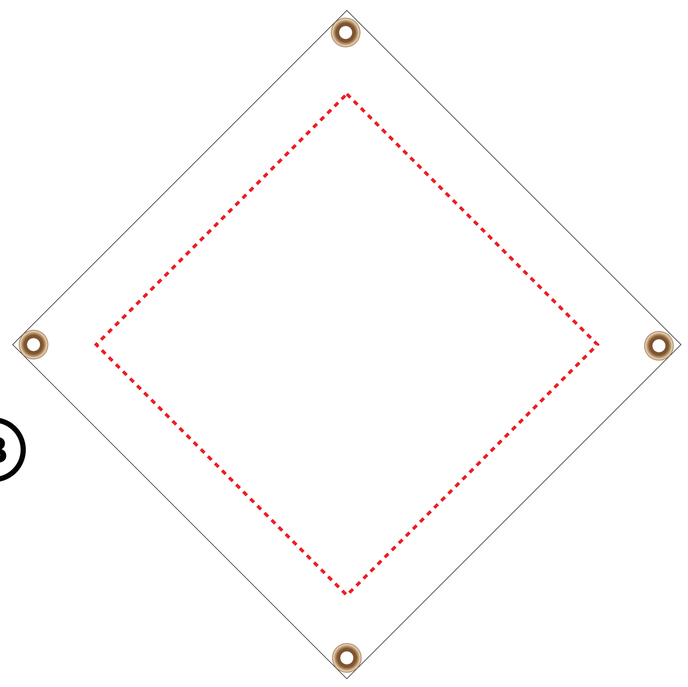

(B)

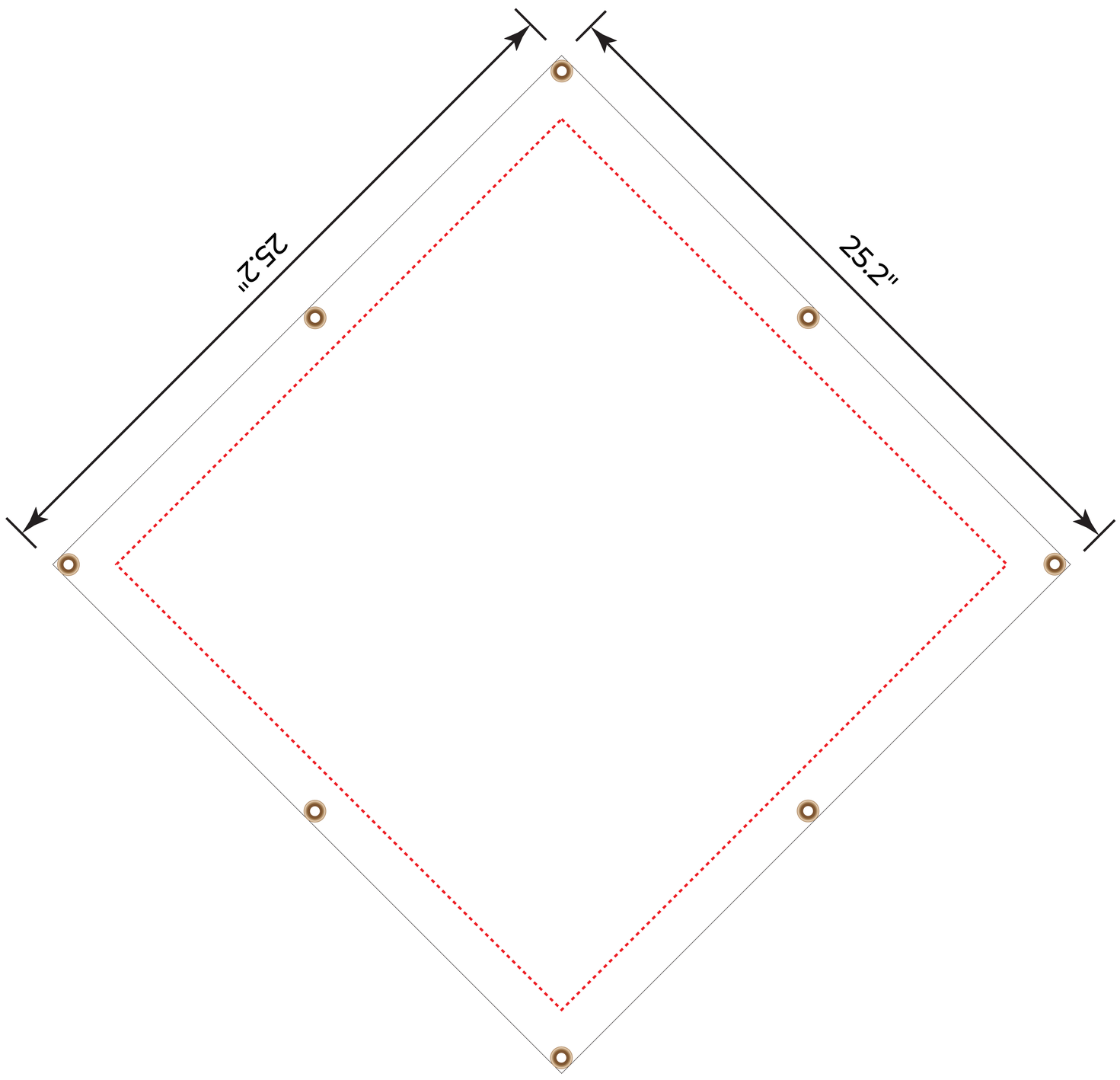


( C )

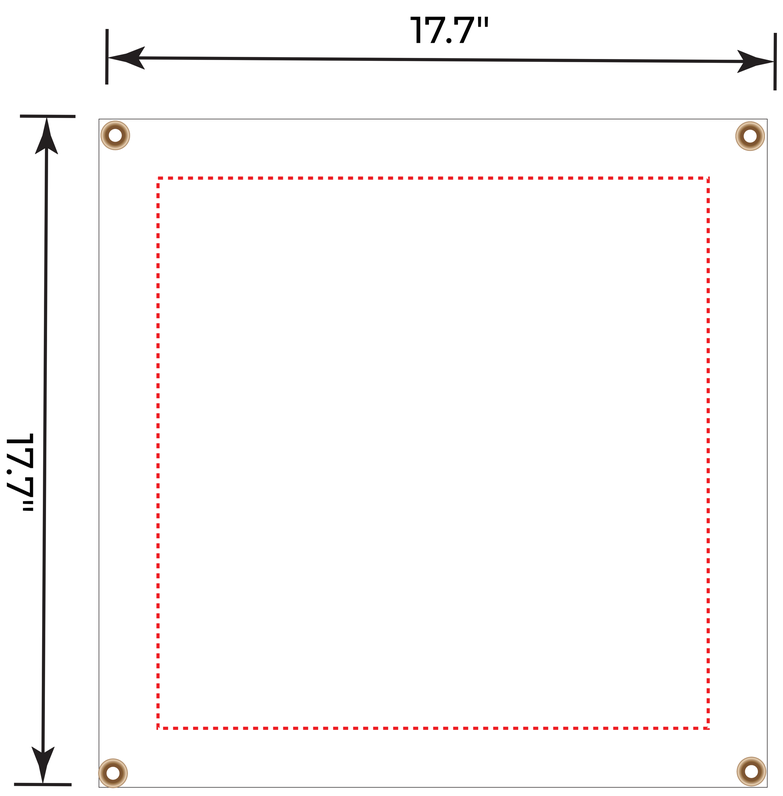


(D)

**IMPORTANT**

Please send artwork in CMYK color mode & note any PMS colors being used.
Please RASTERIZE artwork at a minimum of 150DPI to endure high quality print