LookOurWay

3x3 - 7 PANEL

TABLE TOP POP UP DISPLAYS

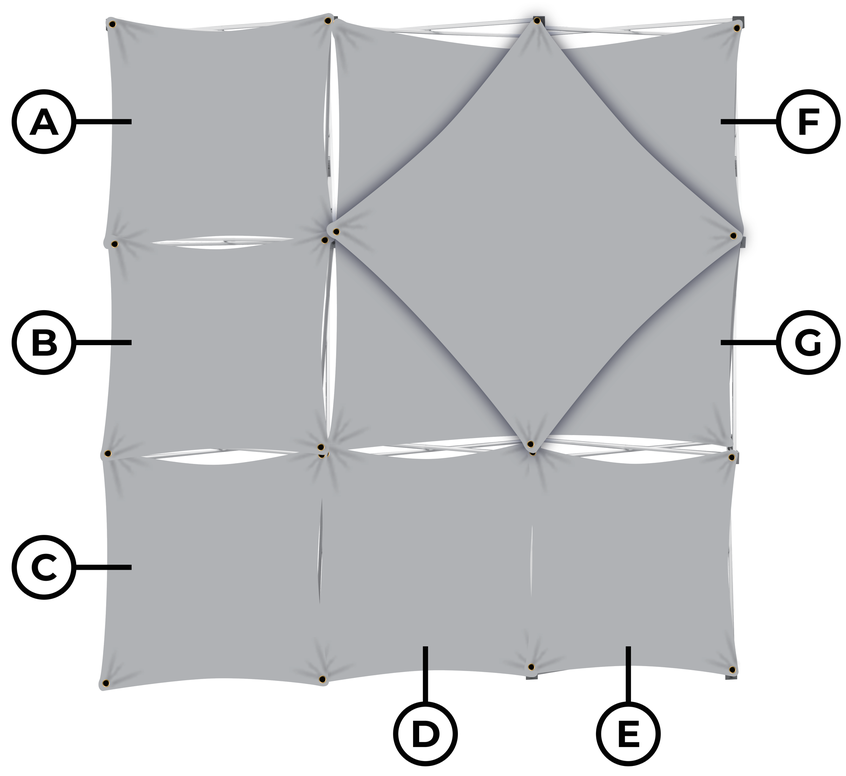

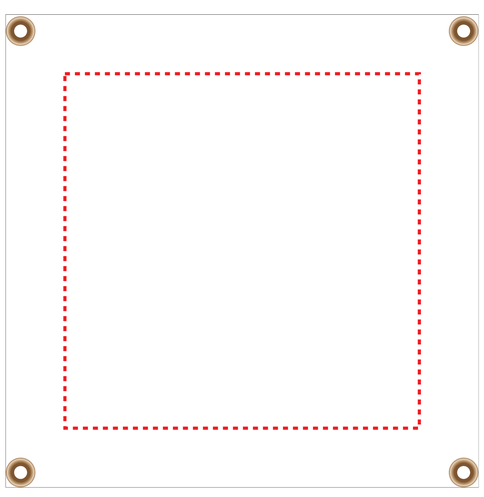

(A)

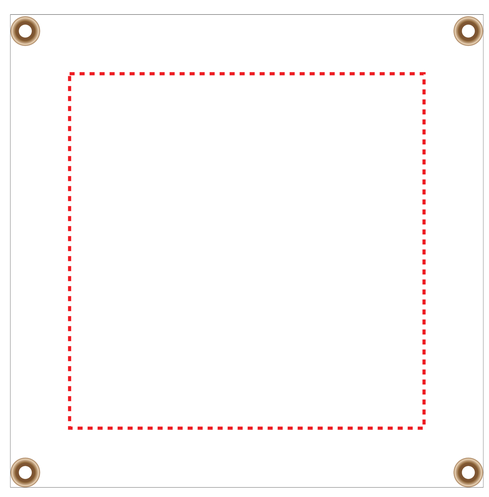

(B)

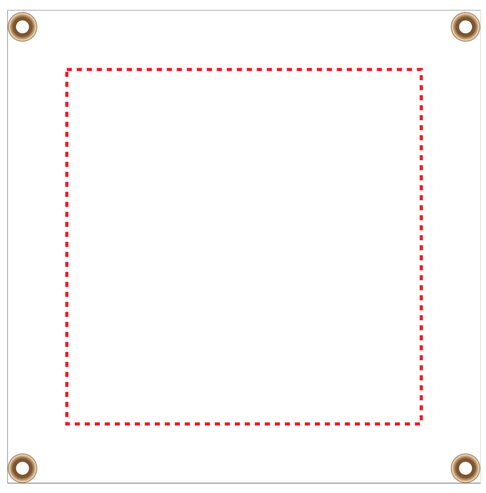

(C)

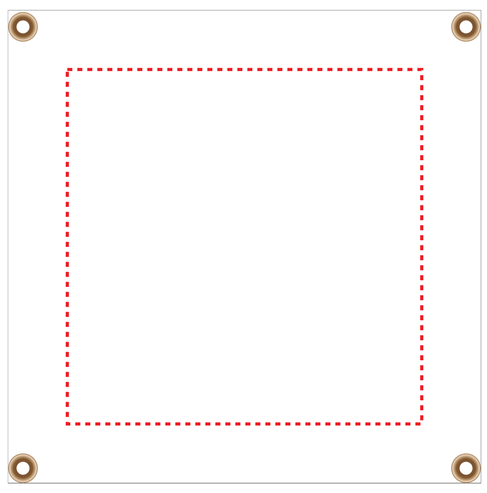

(D)

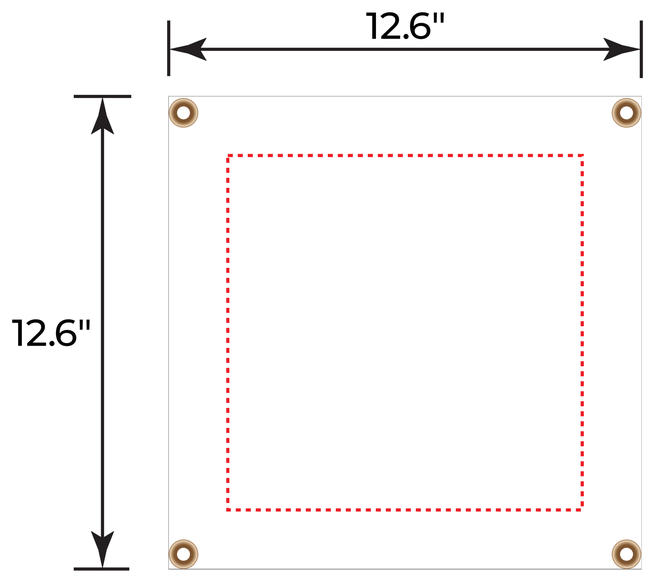

(E)

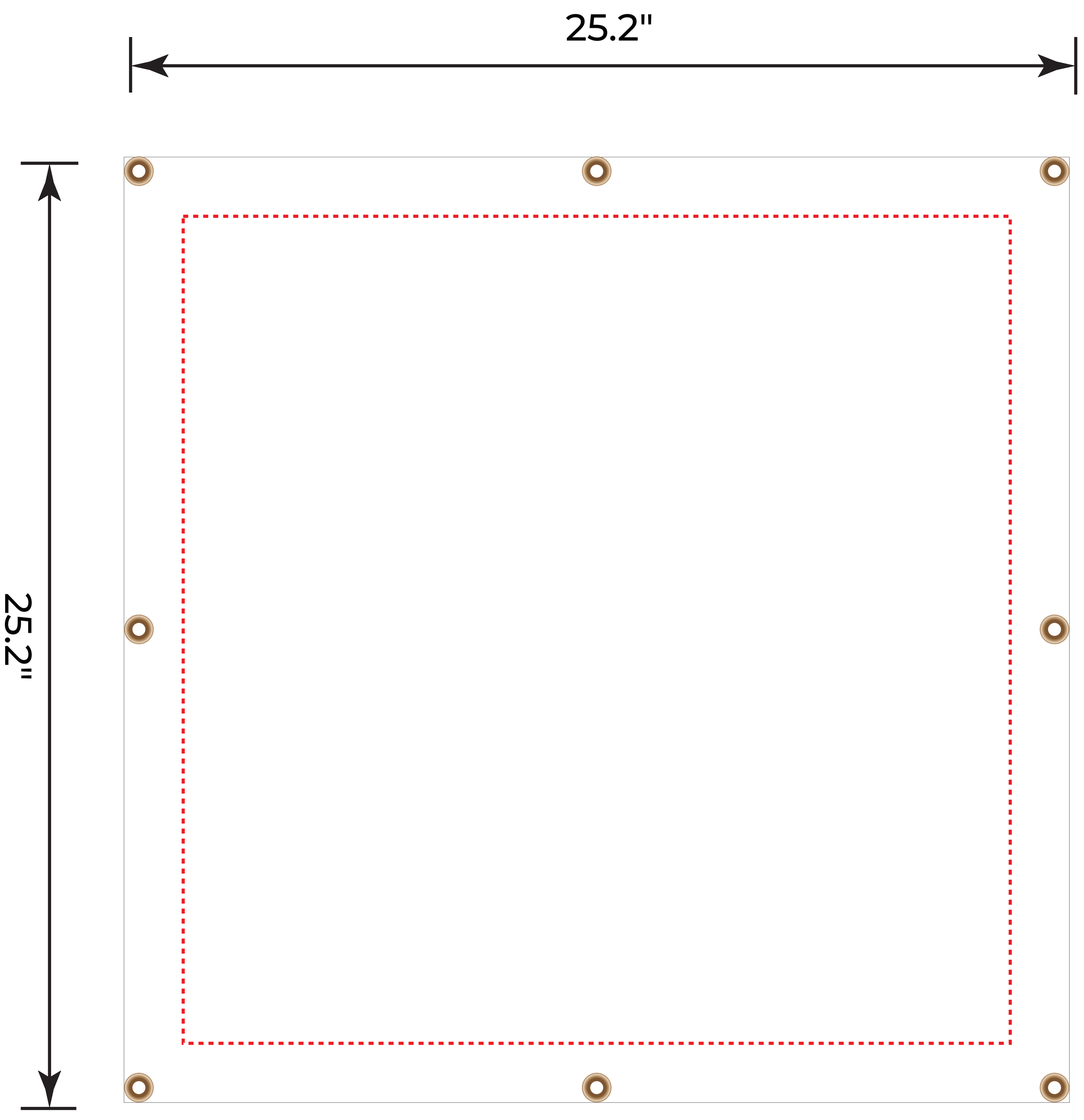

(F)

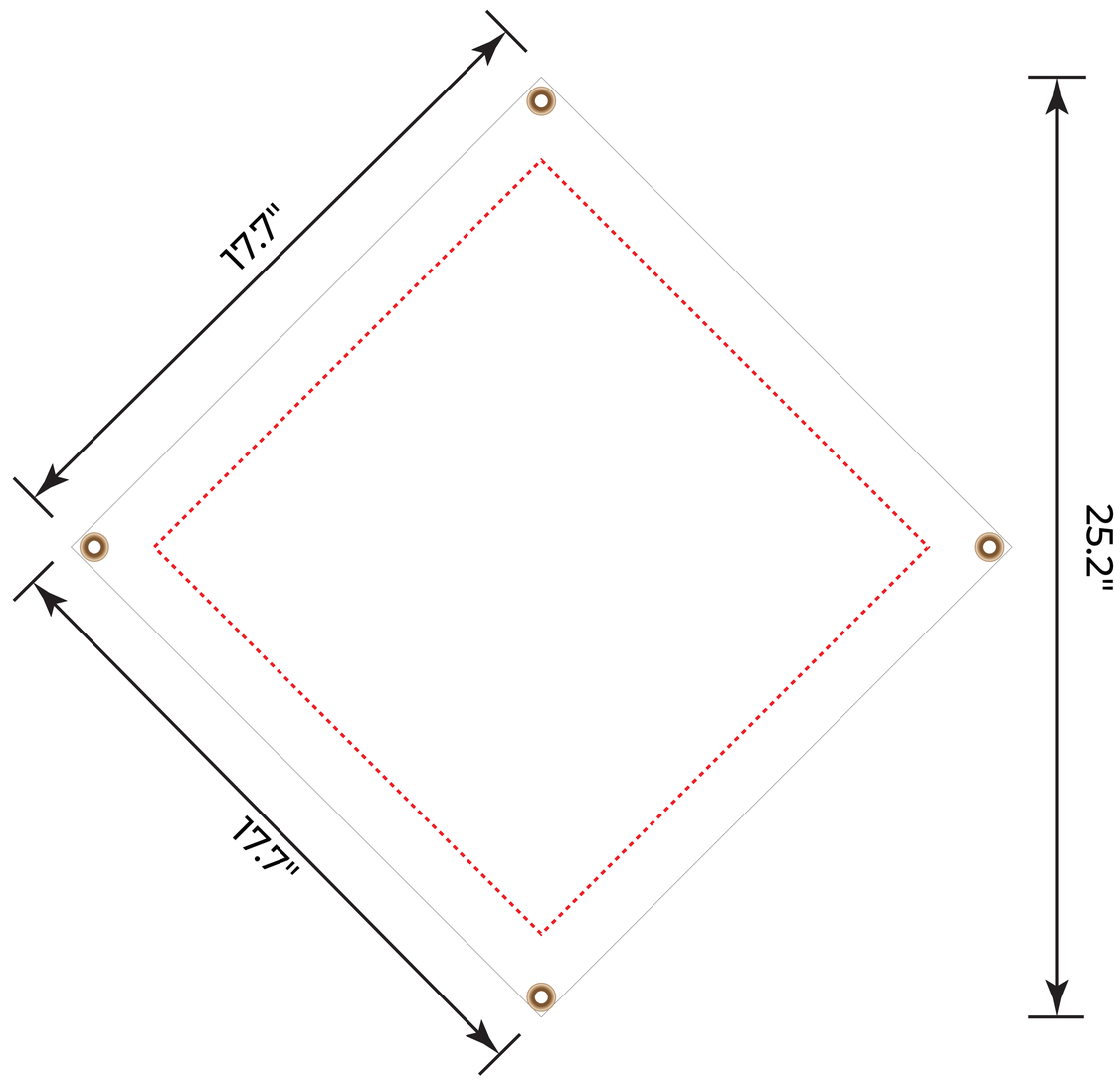

(G)

IMPORTANT

Please send artwork in CMYK color mode & note any PMS colors being used.
Please RASTERIZE artwork at a minimum of 150DPI to endure high quality print

LookOurWay.com | 866-586-3888 | sales@lookourway.com