LookOurWay

20FT - PRO INFLATABLE BATTING CAGE

TOP

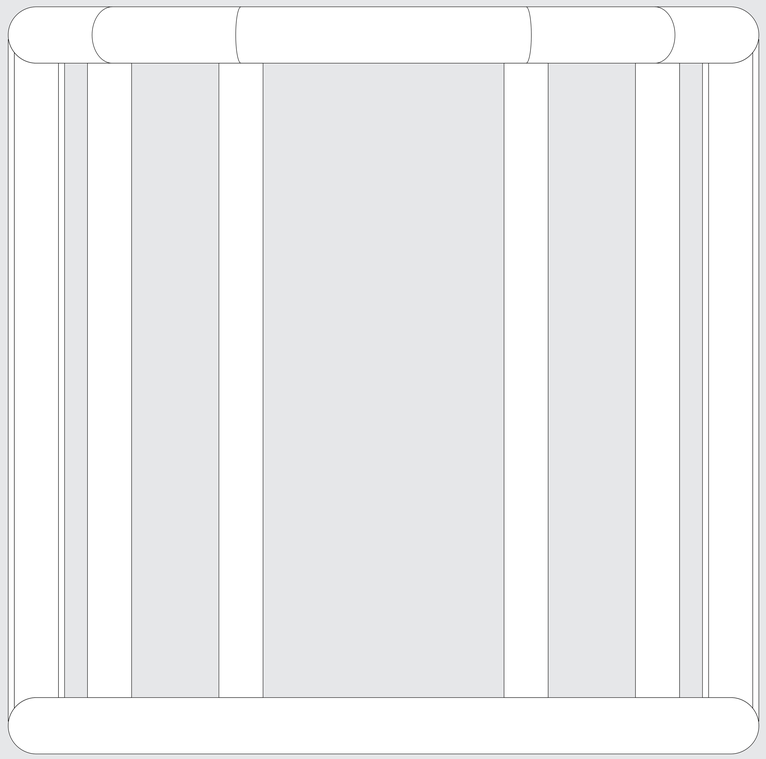

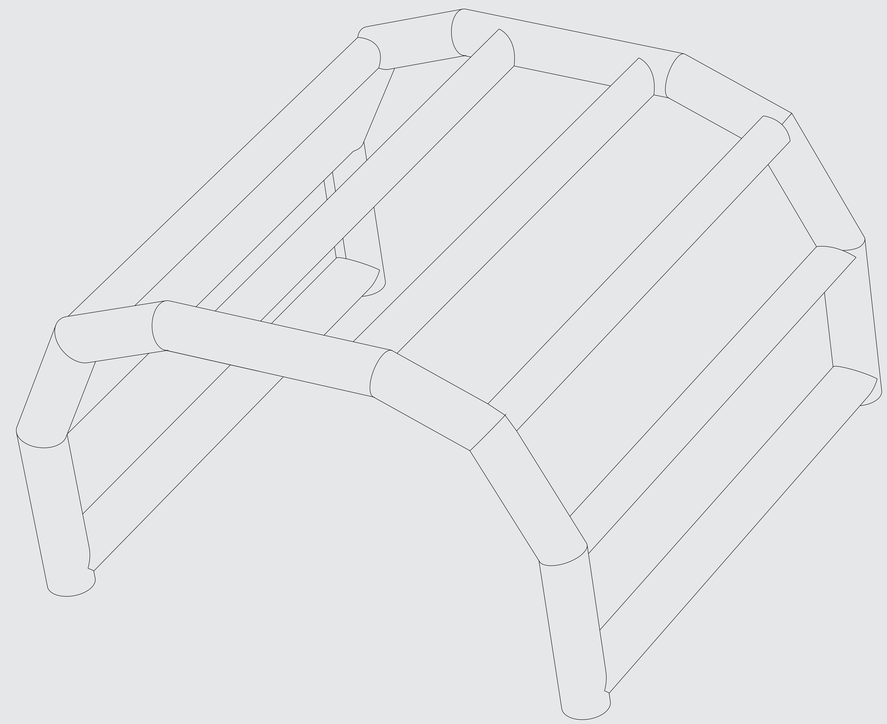

FRONT

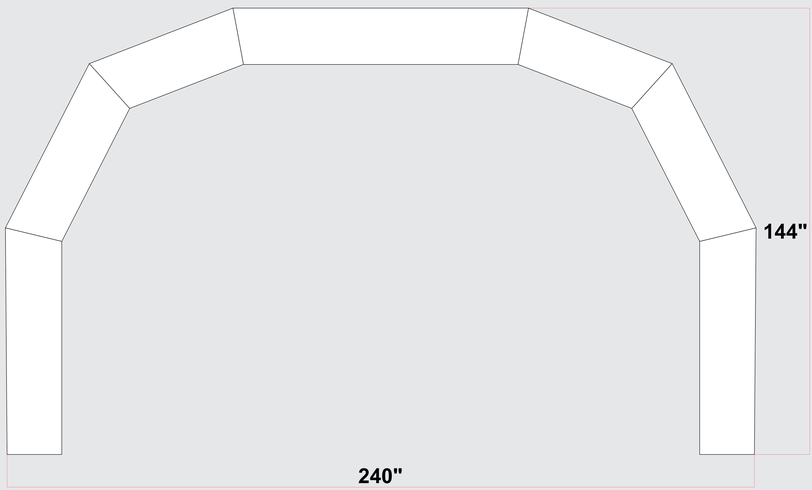

SIDE (A)

SIDE (B)